CIVIL WORKS AND SOIL INVESTIGATION

1.0 GENERAL

The provisions of this section of specification shall only be applicable to the extent of scope of works indicated in Bid Proposal Sheet (BPS). The intent of specification covers the following:

Design, engineering, and construction of all civil works at sub-station. All civil works shall also satisfy the general technical requirements specified in other Sections of this Specification and as detailed below. They shall be designed to the required service conditions/loads as specified elsewhere in this Specification or implied as per National/ International Standards.

All civil works shall be carried out as per applicable Indian Laws, Standards and Codes. All materials shall be of best quality conforming to relevant Indian Standards and Codes.

The Contractor shall furnish all design, drawings, labour, tools, equipment, materials, temporary works, constructional plant and machinery, fuel supply, transportation and all other incidental items not shown or specified but as may be required for complete performance of the Works in accordance with approved drawings, specifications and direction of Employer.

The work shall be carried out according to the design/drawings to be developed by the Contractor and approved by the owner based on Tender Drawings Supplied to the Contractor by the Owner. For all buildings, structures, foundations etc. necessary layout and details shall be developed by the Contractor keeping in view the functional requirement of the substation facilities and providing enough space and access for operation, use and maintenance based on the input provided by the Owner. Certain minimum requirements are indicated in this specification for guidance purposes only.

In case of R&M of existing substations, Contactor shall visit site to ascertain the amount of repair and strengthening of structures and foundations, dismantling and new construction of structures and foundations works are to be done before quoting. Contractor must furnish the design and drawings in support of the activities mentioned above that are to be carried out in the R&M of existing substation site.

The rate quoted by the bidder shall be for all type of civil work shall be firm irrespective of the type of terrain. Depth of filing above virgin land to be taken as 1 meter for this purpose. In case of higher filling, the cost of extra column (volume-wise) shall be payable as per DSR.

However, the Contractor shall quote according to the complete requirements.

2.0 GEOTECHNICAL INVESTIGATION

2.1 The Contractor shall perform a detailed soil investigation to arrive at sufficiently accurate, general as well as specific information about the soil profile and the necessary soil parameters of the site. So that the foundation of the various structures can be designed and constructed safely and rationally.

A report to the effect will be submitted by the Contractor for Owner's specific approval giving details regarding data proposed to be utilised for civil structures design.

2.2 The Contractor should visit the site to ascertain the soil parameters before submitting the bid. The topography is uneven steeply sloping at few places requiring cutting and filling operations including slope stability and protection measures (if slopes encountered). Any variation in soil data shall not constitute a valid reason for any additional cost & shall not affect the terms & condition of the Contract. Tests must be conducted under all the critical locations i.e. Control Room Building. Tower locations, transformer etc.

3.0 SCOPE OF WORK

This specification covers all the work required for detailed soil investigation and preparation of a detailed report. The work shall include mobilisation of necessary equipment, providing necessary engineering supervision and technical personnel, skilled and unskilled labour etc. as required to carry out field investigation as well as, laboratory investigation, analysis and interpretation of data and results, preparation of detailed Geo-technical report including specific recommendations for the type of foundations and the allowable safe bearing capacity for different sizes of foundations at different founding strata for the various structures of the substation. The Contractor shall make his own arrangement for locating the co-ordinates and various test positions in field as per the information supplied to him and also for determining the reduced level of these locations with respect to the benchmark indicated by the Owner.

All the work shall be carried out as per latest edition of the corresponding Indian Standard Codes.

3.1 Bore Holes

Drilling of bore holes of 150 mm dia. in accordance with the provisions of IS: upto 10 m depth or to refusal which ever occur earlier. (By refusal it shall mean that a standard penetration blow count (N) of 100 is recorded for 30 cm penetration). For a new substation, minimum three (3) bore holes shall be done to find out the geological profile of the area. If any unconformity encountered then more bore holes shall be drilled with the approval of Engineer-in-charge for the new projects. However in case deep pile foundations are envisaged the depths have to be regulated as per codal provisions. In cases where rock is encountered, coring in one borehole per bay shall be carried out to 1.5 M in bedrock and continuous core recovery is achieved.

Performing Standard Penetration Tests at approximately 1.5 m interval in the borehole starting from 1.5 m below ground level onwards and at every change of stratum. The disturbed samples from the standard penetrometer shall also be collected for necessary tests.

Collecting undisturbed samples of 100/75 mm diameter 450 mm long from the boreholes at intervals of 2.5 m and every change of stratum starting from 1.0 m below ground level onwards in clayey strata.

The depth of Water table shall be recorded in each borehole.

All samples, both disturbed and undisturbed, shall be identified properly with the borehole number and depth from which they have been taken.

The sample shall be sealed at both ends of the sampling tubes with wax immediately after the sampling and shall be packed properly and transported to the Contractor's laboratory without any damage or loss.

The logging of the boreholes shall be compiled immediately after the boring is completed and a copy of the bore log shall be handed over to the Engineer-in-charge.

3.2 Electrical Resistivity Test

This test shall be conducted to determine the Electrical resistivity of soil required for designing safe grounding system for the entire station area. The specifications for the equipments and other accessories required for performing electrical resistivity test, the test procedure, and reporting of field observations shall confirm to IS: 3043. The test shall be conducted using Wagner's four electrode method as specified in IS: 1892, Appendix-B2. Unless otherwise specified at each test location, the test shall be conducted along two perpendicular lines parallel to the coordinate axis. On each line a minimum of 8 to 10 readings shall be taken by changing the spacing of the electrodes from an initial small value of 0.5 m upto a distance of 10.0 m.

3.3 Water Sample

Representative samples of ground water shall be taken when ground water is first encountered before the addition of water to aid drilling of boreholes. The samples shall be of sufficient quantity for chemical analysis to be carried out and shall be stored in airtight containers.

3.4 Back Filling of Bore Holes

On completion of each hole, the Contractor shall backfill all bore holes as directed by the Owner. The backfill material can be the excavated material and shall be compacted properly.

3.5 Laboratory Test

1. The laboratory tests shall be carried out progressively during the field work after sufficient number of samples have reached the laboratory in order that the test results of the initial bore holes can be made use of in planning the later stages of the field investigation and quantum of laboratory tests.

2. All samples brought from field, whether disturbed or undisturbed shall be extracted/prepared and examined by competent technical personnel, and the test shall be carried out as per the procedures laid out in the relevant I.S. Codes.

The following laboratory tests shall be carried out

a) Visual and Engineering Classification

b) Liquid limit, plastic limit and shrinkage limit for C-ϕ soils.

c) Natural moisture content, bulk density and specific gravity.

d) Grain size distribution.

e) Swell pressure and free swell index determination for expensive soil only.

f) Consolidated un-drained test with pore pressure measurement.

g) Chemical tests on soil and water to determine the carbonates, sulphates, nitrates, chlorides, Ph value, and organic matter and any other chemical harmful to the concrete foundation.

h) C.B.R value

i) Rock quality designation (RQD), RMR in case of rock is encountered

3.6 Test Results and Reports

3.6.1 The Contractor shall submit the detailed report in two (2) copies wherein information regarding the geological detail of the site, summarised observations and test data, bore logs, and conclusions and recommendations on the type of foundations with supporting calculations for the recommendations. Initially the report shall be submitted by the Contractor in draft form and after the draft report is approved, the final report in two (3) copies shall be submitted. The test data shall bear the signatures of the Investigation Agency, Vendor and also site representative of POWERGRID.

3.6.2. The report shall include but not limited to the following:

a) A plan showing the locations of the exploration work i.e. bore holes, dynamic cone penetration tests etc.

b) Bore Logs: Bore logs of each bore holes clearly identifying the stratification and the type of soil stratum with depth. The values of Standard Penetration Test (SPT) at the depths where the tests were conducted on the samples collected at various depths shall be clearly shown against that particular stratum.

Test results of field and laboratory tests shall be summarised strata wise as well in combined tabular form. All relevant graphs, charts tables, diagrams and

photographs, if any, shall be submitted along with report. Sample illustrative reference calculations for settlement, bearing capacity, pile capacity shall be enclosed.

3.7 **Recommendations:** The report should contain specific recommendations for the type of foundation for the various structures envisaged at site. The Contractor shall acquaint himself about the type of structures and their functions from the Owner. The observations and recommendations shall include but not limited to the following:

a) Geological formation of the area, past observations or historical data, if available, for the area and for the structures in the nearby area, fluctuations of water table etc. Slope stability characteristics and landslide history of the area shall be specifically highlighted. Remedial measures to be adopted shall also be given.

b) Recommended type of foundations for various structures. If piles are recommended the type, size and capacity of pile and groups of piles shall be given after comparing different types and sizes of piles and pile groups.

c) Allowable bearing pressure on the soil at various depths for different sizes of the foundations based on shear strength and settlement characteristics of soil with supporting calculations. Minimum factor of safety for calculating net safe bearing capacity shall be taken as 3.0 (three). Recommendation of liquefaction characteristics of soil shall be provided.

d) Recommendations regarding slope of excavations and dewatering schemes, if required. Required protection measures for slope stability for cut & fill slopes of switchyard and approach road with stone pitching/retaining walls shall be clearly spelt out. Calculation shall also be provided for stability adequacy.

e) Comments on the Chemical nature of soil and ground water with due regard to deleterious effects of the same on concrete and steel and recommendations for protective measures.

f) If expansive soil is met with, recommendations on removal or retaining the same under the structure, road, drains, etc. shall be given. In the latter case detailed specification of any special treatment required including specification or materials to be used, construction method, equipments to be deployed etc. shall be furnished. Illustrative diagram of a symbolic foundation showing details shall be furnished.

g) Recommendations for additional investigations beyond the scope of the present work, if considered such investigation as necessary.

4.0 SITE PREPARATION

The contractor shall be responsible for proper leveling of switchyard site as per layout and levels of switchyard finalised during detailed engineering stage. The Contractor at his own cost shall make the layout and levels of all structure etc from the general grids

of the plot and benchmarks set by the Contractor and approved by the Owner. The Contractor shall give all help in instruments, materials and personnel to the Owner for checking the detailed layout and shall be solely responsible for the correctness of the layout and levels. Site leveling shall be in the scope of the contractor. Bidder may decide the level of the sites. However, the level shall be such that it is 300 mm higher than the highest flood level (HFL) of the site. If HFL is not available, then nearby road level shall be assumed as HFL.

Whenever for bay extension works the existing substation are to be modified or strengthen, contractor should keep same as EGL of existing sub-station so that FFL shall be same for both and all the necessary arrangements are to be carried out in this regard by the contractor.

5.0 SCOPE OF WORKS

This clause covers the design and execution of the work for site preparation, such as clearing of the site, the supply and compaction of fill material, slope protection by stone pitching/retaining walls depending on the site location & condition, excavation and compaction of backfill for foundation, road construction, drainage, trenches and final topping by brick soling/stone filling.

5.1 General

1) The Contractor shall develop the site area to meet the requirement of the intended purpose. The site preparation shall conform to the requirements of relevant sections of this specification or as per stipulations of standard specifications. Contractor shall also carry out necessary protection of slope of switchyard area and approach road.

2) The fill material if required shall be suitable for the above requirement. The fill shall be such material and the site so designed as to prevent the erosion by wind and water of material from its final compacted position or the in-site position of undisturbed soil.

3) Material unsuitable for founding of foundations shall be removed and replaced by suitable fill material and to be approved by the Owner.

4) Backfill material around foundations or other works shall be suitable for the purpose for which it is used and compacted to the density described under Compaction. Excavated material not suitable or not required for backfill shall be disposed off in areas as directed by owner upto a maximum lead of 1 km.

5.2 Excavation and backfill

1. Excavation and backfill for foundations shall be in accordance with the relevant code.

2. Whenever water table is met during the excavation, it shall be dewatered and water table shall be maintained below the bottom of the excavation level during excavation, concreting and backfilling.

3. When embankments are to be constructed on slopes of 15% or greater, benches or steps with horizontal and vertical faces shall be cut in the original slope prior to placement of embankment material. Vertical faces shall measure not more than 1 m in height.

4. Embankments adjacent to abutments, culverts, retaining walls and similar structures shall be constructed by compacting the material in successive uniform horizontal layers not exceeding 20 cm in thickness (of loose material before compaction). Each layer shall be compacted as required by means of mechanical tampers approved by the Owner. Rocks larger than 10 cm in any direction shall not be placed in embankment adjacent to structures.

5. Earth embankments of roadways and site areas adjacent to buildings shall be placed in successive uniform horizontal layers not exceeding 20 cm in thickness in loose stage measurement and compacted to the full width specified. The upper surface of the embankment shall be shaped so as to provide complete drainage of surface water at all times.

6. The land required for borrowing earth shall be arranged & selected by contractor. The identified land shall be got approved by site in charge. The quoted rates shall include cost of earth, taxes, duties, royalty, compensation for the land identified for borrow earth. The rate shall also be inclusive of all leads, lifts, ascent, descent and testing required for completion of work in all respect.

7. The ground levels for all measurements shall be taken at every 5 meter distance in uniformly sloping ground and at closer distance where pits/undulations are met with. In fairly leveled area, levels shall be taken at 15 mt. apart at the discretion of Engineer in Charge. The ground levels shall be recorded and plotted on plans. The same is signed by the contractor and the Engineer in Charge before the earth work is started. All labor, material, tool, equipment etc required for the above work shall be arranged by the contractor at his own cost.

5.3 Compaction

1. The density to which fill materials shall be compacted shall be as per relevant IS and as per direction of Owner. All compacted sand filling shall be confined as far as practicable. Backfilled earth shall be compacted to minimum 95% of the Standard Proctor's density at OMC. The sub-grade for the roads and embankment filling shall be compacted to minimum 95% of the Standard Proctor's density at OMC. Cohesion less material sub grade shall be compacted to 70% relative density (minimum).

2. At all times unfinished construction shall have adequate drainage. Upon completion of the road's surface course, adjacent shoulders shall be given a final shaping, true alignment and grade.

3. Each layer of earth embankment when compacted shall be as close to optimum moisture content as practicable. Embankment material, which does not contain sufficient moisture to obtain proper compaction, shall be wetted. If the material contains any excess moisture, then it shall be allowed to dry before rolling. The rolling shall begin at the edges overlapping half the width of the roller each time and progress to the center of the road or towards the building as applicable. Rolling will also be required on rock fills. No compaction shall be carried out in rainy weather.

5.4 Requirement for fill material under foundation

All foundations shall rest below virgin ground level and the minimum depth of foundation below the virgin ground level shall be at least 500 mm. For small equipment and minor foundations like marshalling kiosk, Switch board stand, earth switch and main box support etc. may be reduced to 300 mm with specific approval of the owner.

6.0 STONE FILLING & ANTI-WEED TREATMENT

6.1 Scope of Works

The Contractor shall furnish all labour, equipment and materials required for complete performance of the work in accordance with the drawings, specification and direction of the Owner.

Stone filling shall be done in the areas of the switchyard wherever equipments and or structures are to be provided under present scope of work covering entire fencing area.

Prevailing practice of stone filling is to be adopted for the bay extension works of existing substations. Contractor shall verify the existing practice prevailing at site before quoting.

Before taking up stone rolling, antiweed treatment shall be applied in the switchyard area where stone filling is to be done and the area shall be thoroughly de-weeded including removal of the roots. The recommendation of local agriculture/horticulture department shall be sought wherever feasible while choosing the type of chemical to be used. Nevertheless the effectiveness of chemical shall be demonstrated by the contractor in a test area of size 10 meter x 10 meter (approx). The final approval based on the result shall be given by Engineer-in-charge. Antiweed treatment shall be procured from reputed manufacturer. The dosage and application of chemical shall be strictly as per the manufacturer's recommendation. The contractor shall be required to maintain the area free of weed for a period of one year from the date of application of the first dose of the chemical.

7.0 GENERAL REQUIREMENT

7.1 The material required for site surfacing shall be free from all types of organic materials and shall be of standard quality, and as approved by the Owner.

The material to be used for stone filling/ site surfacing shall be uncrushed/ crushed/ broken stone of 20 mm nominal size (single sized) conforming to table 2 of IS: 383-1970. Hardness, flakiness shall be as required for wearing courses are given below.

(a) Sieve analysis limits/Gradation

Sieve size	% passing by weight
40mm	100
20mm	85-100
10mm	0-20
4.75mm	0-5

(b) Hardness
Abrasion value (IS: 2386 part-IV) not more than 40%
Impact value (IS: 2386 part-IV) not more than 30%

(c) Flakiness Index
As per (IS: 2386 part-IV) and maximum value is 25.

7.2 After all the structures/equipments are erected, the surface of the switchyard area shall be maintained, rolled/compacted to the lines and grades as decided by Engineer-in-Charge. De-weeding including removal of roots shall be done before rolling is commenced. Engineer-in-Charge shall decide final formation level so as to ensure that the site appears uniform. The final formation level shall however be very close to the formation level indicated in the drawing using half-ton roller with suitable water sprinkling arrangement to form a smooth and compact surface.

7.3 A base layer of uncrushed/crushed/broken stone of 20 mm nominal size (single sized) shall be spread and rolled/compacted by using half ton roller with 4 to 5 passes and water sprinkling to form a minimum 50 mm layer on the finished ground level of the specified switchyard area excluding roads, drains, cable trench and tower and equipment foundations as indicated in the drawing.

7.4 Over the base layer of site surfacing material, a final surface course of minimum 50 mm thickness of 20 mm nominal size (single sized) broken stone as specified above shall be spread and compacted by light roller using half tones steel roller (width 30" and 24" dia meter) with water sprinkling as directed by the Engineer-in-Charge. The water shall be sprinkled in such a way that bulking does not take place.

7.5 In areas that are considered by the Engineer-in-Charge to be too congested with foundations and structures for proper rolling of the site surfacing material by normal rolling equipments, the material shall be compacted by hand, if necessary. Due care shall be exercised so as not to damage any foundation structures or equipment during rolling compaction.

8.0 SITE DRAINAGE

1. Adequate site drainage system shall be provided by the Contractor in new and existing substation. In case of bay extension of existing substation, drainage layout shall be prepared by the contractor in such away that it should satisfy the technical parameters stated below while designing the drainage system so that flow of water of the existing part of substation remain uninterrupted and the same should be approved by the owner. The technical parameters stated below also to be taken into account while designing the drainage system for new substation as well.
   The Contractor shall obtain rainfall data and design the storm water drainage system, (culverts, ditches, drains etc.) to accommodate run off due to the most intense rainfall that is likely to occur over the catchments area in one hour period on an average of once in ten years. The surface of the site shall be sloped to prevent the ponding of water.
2. The maximum velocity for pipe drains and open drains shall be limited to 2.4m/sec and 1.8m/sec respectively. However, minimum non-silting velocity of 0.6m/sec shall be ensured. Longitudinal bed slope shall not be milder than 1 in 1000.

3. The drains shall be constructed using Brick masonry except at road crossings etc. where RCC pipe shall be used. The RCC pipe for drains and culverts shall be as per IS:456 and IS:783.

4. The Contractor shall ensure that water drains are away from the site area and shall prevent damage to adjacent property by this water. Adequate protection shall be given to site surfaces, roads, ditches, culverts, etc. to prevent erosion of material by water.

5. The drainage system shall be adequate without the use of cable/pipe trenches. (Pipe drains shall be provided in areas of switchyard where movement of crane will be necessary in operating phase of the substation).

6. For pipe drains, concrete pipe of class NP2 shall be used. However, for road crossings etc. higher strength pipe of class NP3 shall be provided. For rail crossings, pipes conforming to railway loading standards or at least NP4 class shall be provided. Manholes shall be provided at every 30m interval, at connection points and at every change of alignment.

7. Open surface drains for new s/s shall be provided with brick masonry in 1:6 (1 cement: 6 coarse sand) cement mortar with 12 mm thick, 1:4 (1 cement: 4 sand) cement plaster inside and exposed surface of drains as per approved drawing. For bay extension at existing substations, prevailing practice of the respective substation shall be adopted.

8. Pipe drains shall be connected through manholes at an interval of max. 30m. Effluents shall be suitably treated by the Contractor to meet all the prevalent statutory requirements and local pollution control norms and treated effluents

shall be conveyed to the storm water drainage system at a suitable location for its final disposal.

9. Invert of the drainage system shall be decided in such a way that the water can easily be discharged above the High Flood Level (HFL) outside substation boundary at suitable location upto a maximum 50M beyond boundary wall of substation or actual whichever occurs earlier and approved by Owner.

10. All internal site drainage system, including the final connection/disposal to owner acceptance points shall be part of Supplier's scope including all required civil works. The Contractor shall connect his drain(s) at one or more points to outfall points as feasible at site.

11. The drainage scheme and associated drawings shall be got approved and constructed as per enclosed drawing no.C/DMS/005-Rev-0. .

9.0 ROADS AND CULVERTS

1. The main approach road including modification of existing road to meet the site conditions, roads for access to equipment and buildings with in substations (including bay extension in existing substations) are in the scope of bidder. Layout of the roads shall be based on General detail & Arrangement drawing for the substation. If extra road is required for functional point of view, which has not been mentioned in the layout drawing, Contractor should provide the same with out extra cost to the owner.

2. All substation roads shall be constructed so as to permit transportation of all heavy equipment. The roads shall have min. 3.0 m wide RCC road as per enclosed drawing no.C/DMS/005-Rev-0.

3. Road construction shall be as per IRC standards.

4. Adequate provision shall be made for road drainage. Protection of cut and embankment slopes of roads as per slope stability requirement shall be made.

5. All the culverts and its allied structure (required for road/rail, drain trench crossings etc.) shall be designed for class A loading as per IRC standard / IS code and should be checked for loading.

6. All roads shall be designed for class 'D' of traffic as per IRC-37 Guide-lines for the design of rigid pavements.

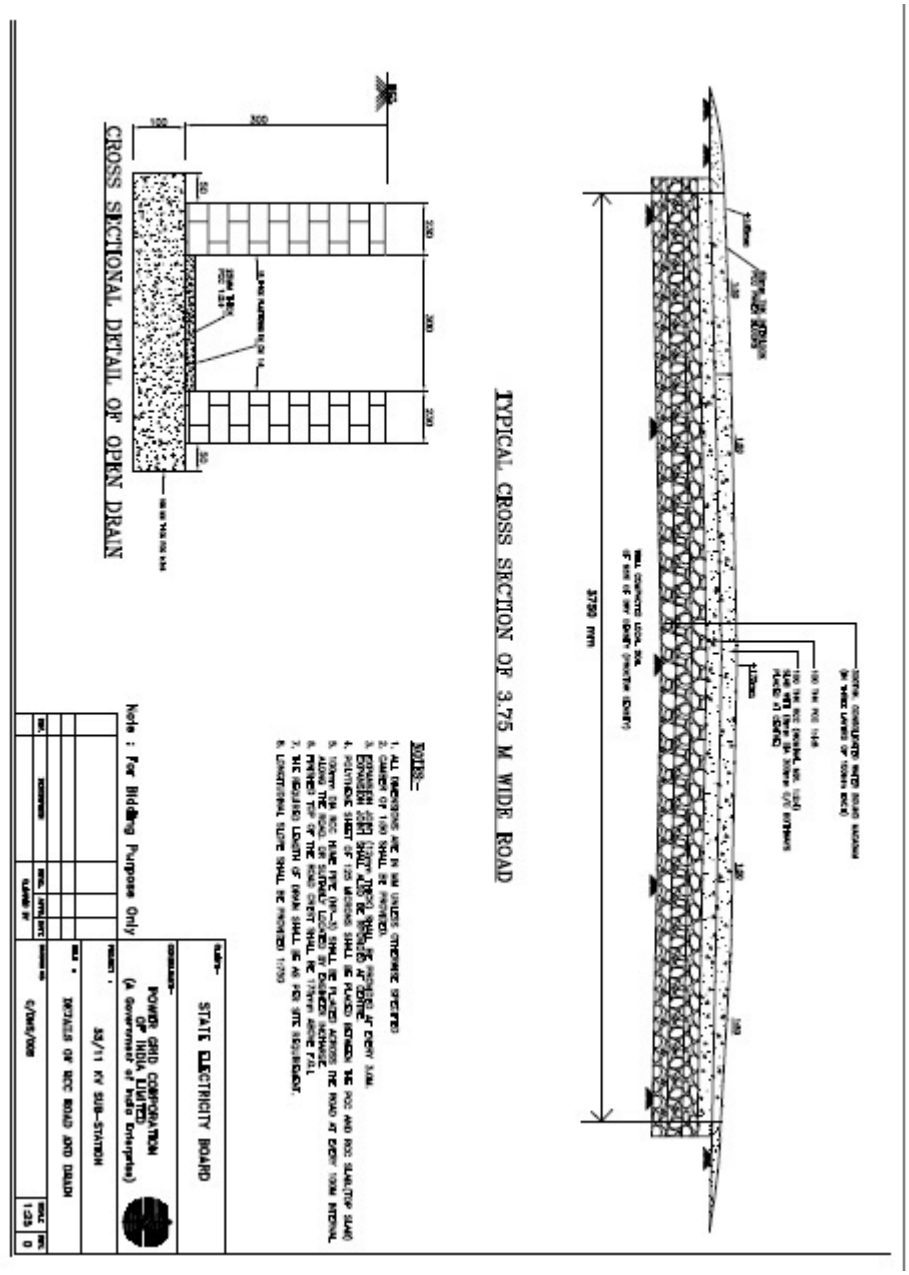

10.0 TRANSFORMER FOUNDATION

The Contractor shall provide a road system integrated with the transformer foundation to enable installation and the replacement of any failed unit by the spare unit located at the site. This system shall enable the removal of any failed unit from its foundation to the nearest road.

If existing/failed transformer is required to be replaced by new one in augmentation/bay extension works of existing substations then the foundation supporting that equipment shall be strengthen by modifying the foundation itself or the foundation shall be dismantle and recast new foundation as per site conditions. However, contractor must furnish the design calculation incorporating all those changes so that safety of the structure and foundation remain adequate.

Similarly all types of equipment foundations with /without supporting structures shall be treated in similar manner as stated for transformer foundations.

Contractor must access the amount of work involve for augmentation/bay extension of existing substations while quoting.

12.0 CABLE & PIPE TRENCHES

1. The cable trenches and precast removable RCC cover (with lifting arrangement) shall be constructed using RCC of M20 grade for new substation whereas for bay extension of existing substation size and material of cable trenches shall be same as the existing one and pre-cast removable RCC cover (with lifting arrangement) shall be constructed using RCC of M20 grade. Cable trenches must be designed for the design criteria stated below, whether it is of concrete or brick for both new substations and bay extension works in existing substations.

2. The cable trench walls shall be designed for the following loads.

   (i) Dead load of 100 kg/m length of cable support + 75 Kg on one tier at the end.
   (ii) Triangular earth pressure + uniform surcharge pressure of 1T/m2.

3. Cable trench covers shall be designed for self-weight of top slab + concentrated load of 200 kg at centre of span on each panel.

4. Cable trench crossing the road/rails shall be designed for class A. Loading of IRC/relevant IS Code and should be checked for transformer loading.

5. Trenches shall be drained. Necessary sumps be constructed and sump pumps if necessary shall be supplied. Cable trenches shall not be used as storm water drains.

6. The top of trenches shall be kept at least 100 mm above the finished ground level for the new substation. The top of cable trench shall be such that the surface rainwater does not enter the trench.
   The top of trench shall be kept same as existing one to maintain uniformity of the cable trenches structure in case of bay extension works of existing substations.

7. All metal parts inside the trench shall be connected to the earthing system.

8. Cables from trench to equipments shall run in hard conduit pipes.

9. Trench wall shall not foul with the foundation. Suitable clear gap shall be provided.

10. The trench bed shall have a slope of 1/500 along the run & 1/250 perpendicular to the run.

11. Cable trenches shall be blocked at the ends if required with brick masonry in cement sand mortar 1:6 and plaster with 12mm thick 1:6 cement sand mortar.

12. Cable trench contains cable trey that shall be supported on ISA. The size and spacing of angle section shall be as per design criteria mentioned above.

13. Cable trench shall be constructed as per enclosed drawing no.C/DMS/002-Rev-0. .

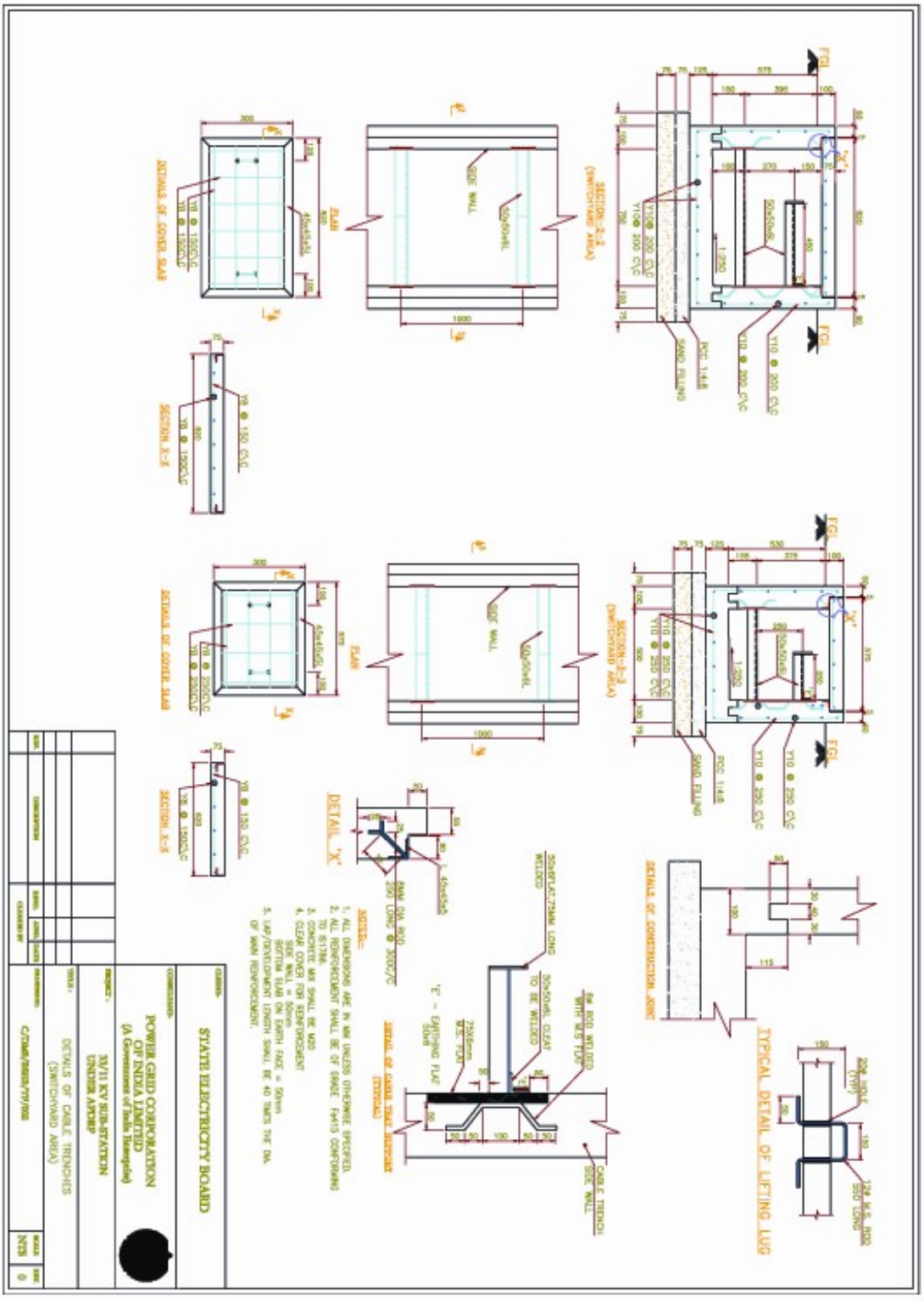
STATE ELECTRICITY BOARD
POWER GRID CORPORATION OF INDIA LIMITED
33/11 KV SUB-STATION UNDER APDRP
DETAILS OF CABLE TRENCHES (SWITCHYARD AREA)
DETAIL 'X'
TYPICAL DETAIL OF LIFTING LUG
DETAILS OF CONSTRUCTION JOINT
DETAILS OF COVER SLAB
SECTION X-X
SECTION 2-2 (SWITCHYARD AREA)
SECTION 3-3 (SWITCHYARD AREA)
SIDE WALL
SAND FILLING
PCC 1:4:8
NOTES:-
1. ALL DIMENSIONS ARE IN MM UNLESS OTHERWISE SPECIFIED.
2. ALL REINFORCEMENT SHALL BE OF GRADE Fe415 CONFORMING TO IS1786.
3. CONCRETE MIX SHALL BE M20
4. CLEAR COVER FOR REINFORCEMENT SIDE WALL = 50mm BOTTOM SLAB ON EARTH FACE = 50mm
5. LAP/DEVELOPMENT LENGTH SHALL BE 40 TIMES THE DIA. OF MAIN REINFORCEMENT.

13.0 FOUNDATION /RCC CONSTRUCTION

13.1 General

1. Work covered under this Clause of the Specification comprises the design and construction of foundations and other RCC constructions for switchyard structures, equipment supports, trenches, drains, control cubicles, bus supports, transformer, marshalling kiosks, auxiliary equipments & systems, buildings, tanks, boundary wall or for any other equipment or service and any other foundation required to complete the work. This clause is as well applicable to the other RCC constructions.
   However, for the augmentation/bay extension works of existing substation, type of RCC structures and foundations etc. shall be similar to one already existing at the existing substation and for which design shall be furnished in support of safety of those RCC structures and foundations etc. Contractor must access the amount of work involved for the construction of switchyard structures, equipment supports, trenches, drains, control cubicles, bus supports, transformer, marshalling kiosks, auxiliary equipments & systems, buildings, tanks, boundary wall or for any other equipment or service and any other foundation required to complete the work for the existing substations.

2. Concrete shall conform to the requirements mentioned in IS: 456 and all the tests shall be conducted as per relevant Indian Standard Codes as mentioned in Standard field quality plan appended with the specification

   A minimum grade for PCC and RCC shall be used for all structural/load-bearing members as per latest IS 456.

3. If the site is sloppy, the foundation height will be adjusted to maintain the exact level of the top of structures to compensate such slopes.

4. The switchyard foundation's plinths and building plinths shall be minimum 300mm and 500 mm above finished ground level respectively.

5. Minimum 75mm thick lean concrete shall be provided below all underground structures, foundations, trenches etc. to provide a base for construction.

6. Concrete made with Portland slag cement shall be carefully cured and special importance shall be given during the placing of concrete and removal of shuttering.

7. The design and detailing of foundations shall be done based on the approved soil data and sub-soil conditions as well as for all possible critical loads and the combinations thereof. The Spread footings foundation or pile foundation as may be required based on soil/sub-soil conditions and superimposed loads shall be provided.

8. If pile foundations are adopted, the same shall be cast-in-situ driven/bored or precast or under reamed type as per relevant parts of IS Code 2911. Only RCC

piles shall be provided. Suitability of the adopted pile foundations shall be justified by way of full design calculations. Detailed design calculations shall be submitted by the bidder showing complete details of piles/pile groups proposed to be used. Necessary initial load test shall also be carried out by the bidder at their cost to establish the piles design capacity. Only after the design capacity of piles has been established, the Contractor shall take up the job of piling. Routine tests for the piles shall also be conducted. All the work (design & testing) shall be planned in such a way that these shall not cause any delay in project completion.

13.2 Design

1. Foundations shall be of reinforced cement concrete for new substation but for the augmentation / bay extension works of existing substation it could be of RCC/ PCC depending on type of structures and materials used for the similar type of structures in those bay extension works of existing substation. Design requirement shall be fulfilled by the contractor and furnished for approval for both new substation and existing substation (for bay extension works) as specified in the scope of work. The design and construction of RCC/ PCC / Masonry structures shall be carried out as per IS: 456 and relevant IS code/CBIP manual/NBC etc and minimum grade of concrete shall be as per relevant IS code. Higher grade of concrete than specified above may be used at the discretion of Contractor without any additional financial implication to the Owner.

2. Limit state method of design shall be adopted unless specified otherwise in the specification.

3. For detailing of reinforcement IS: 2502 and SP: 34 shall be followed. Cold twisted deformed bars (Fe=415 N/mm2) conforming to IS: 1786 shall be used as reinforcement. However, in specific areas, mild steel (Grade I) conforming to IS: 432 can also be used. Two layers of reinforcement (on inner and outer face) shall be provided for wall & slab sections having thickness more than 150 mm. Clear cover to reinforcement towards the earth face shall be minimum 40 mm.

4. RCC water retaining structures like storage tanks, etc. shall be designed as un-cracked section in accordance with IS: 3370 (Part I to IV) by working stress method. However, water channels shall be designed as cracked section with limited steel stresses as per IS: 3370 (Part I to IV) by working stress method.

5. The procedure used for the design of the foundations shall be the most critical loading combination of the steel structure and or equipment and/or superstructure and other conditions, which produces the maximum stresses in the foundation or the foundation component and as per the relevant IS Codes of foundation design. Detailed design calculations shall be submitted by the bidder showing complete details of piles/pile groups or isolated /combined footings proposed to be used.

6. Design shall consider any sub-soil water pressure that may be encountered following relevant standard strictly.

7. Necessary protection to the foundation work, if required shall be provided to take care of any special requirements for aggressive alkaline soil, black cotton soil or any other type of soil which is detrimental/harmful to the concrete/masonry foundations.

8. RCC columns /pedestals shall be provided with rigid connection at the base.

9. All sub-structures shall be checked for sliding and overturning stability during both construction and operating conditions for various combinations of loads. Factors of safety for these cases shall be taken as mentioned in relevant IS Codes or as stipulated elsewhere in the Specifications. For checking against overturning, weight of soil vertically above footing shall be taken and inverted frustum of pyramid of earth on the foundation should not be considered.

10. Earth pressure for all underground structures shall be calculated using co-efficient of earth pressure at rest, co-efficient of active or passive earth pressure (whichever is applicable).

11. In addition to earth pressure and ground water pressure etc., a surcharge load of 1T/Sq.m shall also be considered for the design of all underground structures including channels, sumps, tanks, trenches, substructure of any underground hollow enclosure etc., for the vehicular traffic in the vicinity of the structure.

12. Following conditions shall be considered for the design of water tank in pumps house, channels, sumps, trenches and other underground structures:

    a) Full water pressure from inside and no earth pressure & ground water pressure & surcharge pressure from outside (application only to structures, which are liable to be filled up with water or any other liquid).

    b) Full earth pressure, surcharge pressure and ground water pressure from outside and no water pressure from inside.

    c) Design shall also be checked against buoyancy due to the ground water during construction and maintenance stages. Minimum factor of safety of 1.5 against buoyancy shall be ensured ignoring the superimposed loadings.

13. The foundations shall be proportioned so that the estimated total and differential movements of the foundations are not greater than the movements that the structure or equipment is designed to accommodate.

14. The foundations of transformer and circuit breaker shall be of block type foundation. Minimum reinforcement shall be governed by IS: 2974 and IS: 456.

15. The tower and equipment foundations shall be checked for a factor of safety of 2.0 for normal condition and 1.5 for short circuit condition against sliding, overturning and pullout.

13.3 Admixtures & additives

1. Only approved admixtures shall be used in the concrete for the Works. When more than one admixture is to be used, each admixture shall be batched in its own batch and added to the mixing water separately before discharging into the mixer. Admixtures shall be delivered in suitably labeled containers to enable identification.

2. Admixtures in concrete shall conform to IS: 9103. The water proofing cement additives shall conform to IS: 2645. Owner shall approve concrete Admixtures/ Additives.

3. The Contractor may propose and the Owner may approve the use of a water-reducing set-retarding admixture in some of the concrete. The use of such an admixture will not be approved to overcome problems associated with inadequate concrete plant capacity or improperly planned placing operations and shall only be approved as an aid to overcoming unusual circumstances and placing conditions.

4. The water-reducing set-retarding admixture shall be an approved brand of Ligno-sulphonate type admixture.

5. The waterproofing cement additives shall be used as required / advised by the Owner.

14.0 GATES AND BOUNDARY WALL

1. The Gate frame shall be made of medium duty MS pipe conforming to relevant IS with welded joints.

2. The gates shall be fabricated with welded joints to achieve rigid connections. The gate frames shall be painted with one coat of approved steel primmer and two coats of synthetic enamel paint.

3. Gates shall be fitted with approved quality iron hinges, latch and latch catch. Latch and latch catch shall be suitable for attachment and operation of pad lock from either side of gates. Hinges shall permit gates to swing through 180 degree back against fence. Gates shall be earthed by G I wire.

4. Gates shall be fitted with galvanized chain hook or gate hold back to hold gates open. Double gates shall be fitted with centre rest and drop bolt to secure gates in closed position.

5. Gates shall be installed in locations shown on drawings. Next to the main gate, a men gate (1.25 m wide, single leaf) shall also be provided.

6. Bottom of gates shall be set approximately 40mm above ground surface and necessary guiding mechanism shall be fitted.

7. The Contractor shall design and construct boundary wall around substation area as per requirements. The boundary wall shall be of height 2.0M and shall be made of RCC frame construction with RCC column and plinth beam arrangement and panels filled with one brick thick wall in cement sand mortar 1:6. The boundary wall shall be plastered on both external and internal faces with cement and sand plaster 1:6 of thickness 18 mm and 12 mm respectively. An additional barbed Y-shaped arm of MS angle 50x50x6 with 3-rows (6 nos) barbed wire A-4 IS: 278. Expansion joints shall be provided as per codal requirements. MS grating shall be provided at required locations for drainage purposes. The boundary wall shall be painted with minimum two coats of color wash over a base coat of white wash with lime. The front portion of boundary wall shall however be with a RC jail and 12 mm square MS bar top above brick work and pebble dash plaster finish with colour pigment. The steel work shall be given two coats of synthetic enamel paint of approved make over one coat of primer. Boundry wall and gate shall be constructed as per enclosed Drawing no. C/DMD/003-Rev-0

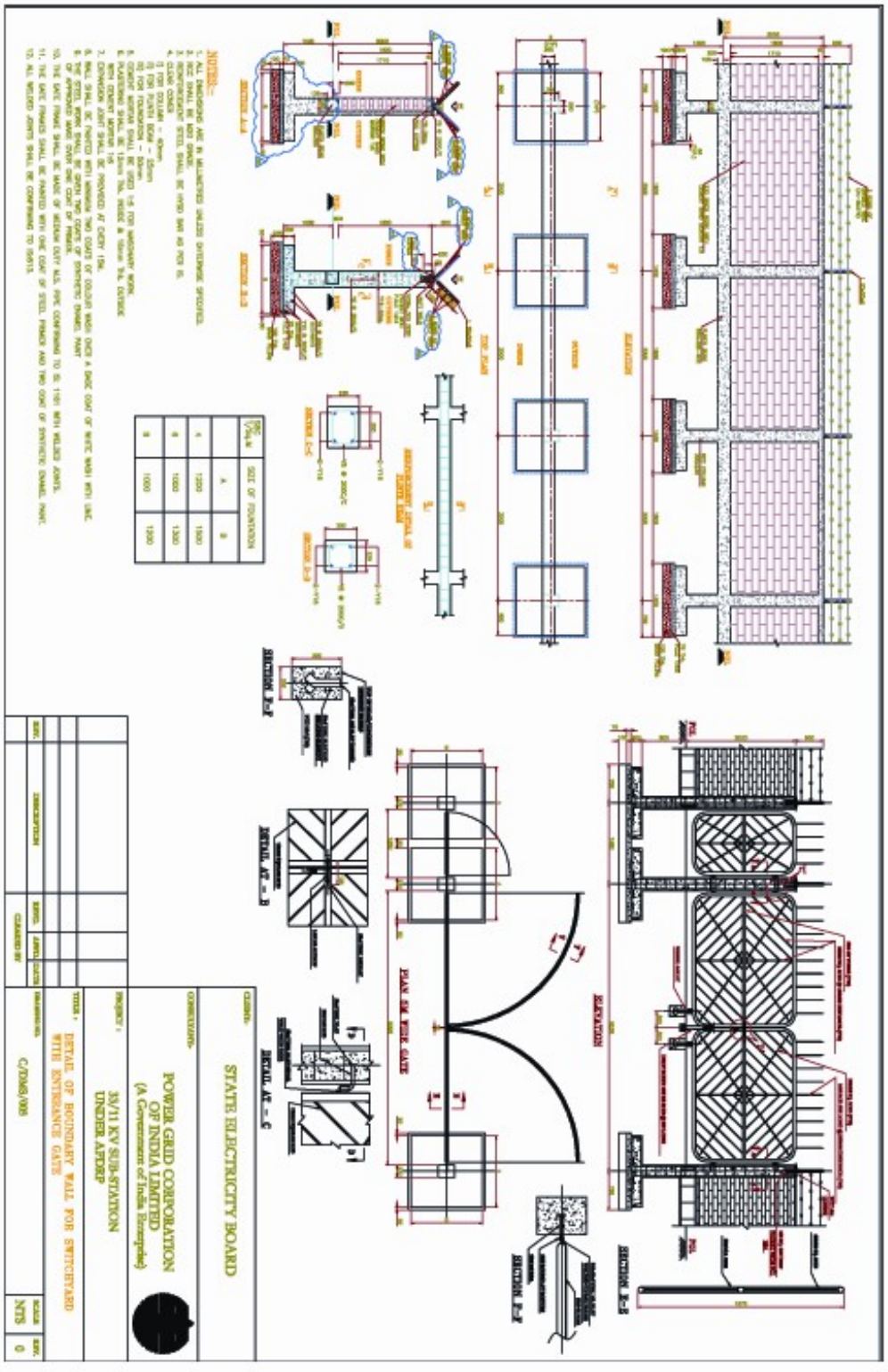
STATE ELECTRICITY BOARD
POWER GRID CORPORATION OF INDIA LIMITED
(A Government of India Enterprise)
33/11 KV SUB-STATION UNDER AFDRP
DETAIL OF BOUNDARY WALL FOR SWITCHYARD WITH ENTRANCE GATE
C/DMS/005
NTS
0

15.0 BUILDINGS - GENERAL REQUIREMENTS

15.1 General

The scope for new control room building includes the design, engineering and construction including anti-termite treatment, plinth protection, DPC of Building including sanitary, water supply, electrification, false ceiling etc. of control room building. The buildings shall be of RCC framed structure of concrete of M20 grade (Min.). Following design criteria shall be adopted for design purposes for new substation.
If any extension of the Control Room building is required in augmentation / bay extension works of existing substation then extension part shall be compatible to existing one structurally and architecturally but following design criteria shall be adopted for design purposes for R&M of existing substation.

15.2 Control room Building

Minimum floor area requirements shall be 12x10 sq. mts. which may be increased at the time of detailed engineering to suit project requirements. The layout of the control room shall be finalised as per detailed engineering to suit project requirements .The minimum dimension of different rooms required for C.R.building shall be as per drawing. The CR building shall consist of the following:

Control room
S/s In-charge room
Battery room
Storeroom
Toilet
Portico

An open space of 1 m minimum shall be provided on the periphery of the rows of panel and equipment generally in order to allow easy operator movement and access as well as maintenance.

Any future possibility of annexe building shall be taken care of while finalizing the layout of the control room building.

Minimum headroom of 3 M below soffit of beams/false ceiling shall be considered for rooms. The roof shall have four side sloping roof or flat roof as finalised during detailed engineering.

15.2.1 Design

a) The buildings shall be designed:

1. To the requirements of the National Building Code of India, and the standards quoted therein.

2. For the specified climatic & loading conditions.

3. To adequately suit the requirements of the equipment and apparatus contained in the buildings and in all respects to be compatible with the intended use and occupancy.

4. With a functional and economical space arrangement.

5. For a life expectancy of structure, systems and components not less than that of the equipment, which is contained in the building, provided regular maintenance is carried out.

6. Be aesthetically pleasing. Different buildings shall show a uniformity and consistency in architectural design.

7. To allow for easy access to equipment and maintenance of the equipment.

8. With, wherever required, fire retarding materials for walls, ceilings and doors, which would prevent supporting or spreading of fire.

9. Suitable expansion joints shall be provided in the longitudinal direction wherever necessary with provision of twin columns.

10. Individual members of the buildings frame shall be designed for the worst combination of forces such as bending moment, axial force, shear force, torsion etc.

11. Permissible stresses for different load combinations shall be taken as per relevant IS Codes.

12. The building lighting shall be designed in accordance with the requirements of relevant section.

15.2.2 Design loads

Building structures shall be designed for the most critical combinations of dead loads, super- imposed loads, equipment loads, crane load, wind loads, seismic loads, and temperature loads.

Dead loads shall include the weight of structures complete with finishes, fixtures and partitions and should be taken as per IS: 1911.

Super-imposed loads in different areas shall include live loads, minor equipment loads, cable trays, small pipe racks/hangers and erection, operation and maintenance

loads. Equipment loads shall constitute, if applicable, all load of equipments to be supported on the building frame.

The wind loads shall be computed as per IS 875, Seismic Coefficient method shall be used for the seismic analysis as per IS 1893 with importance factor 1.5.

Wind and Seismic forces shall not be considered to act simultaneously.

Floors/slabs shall be designed to carry loads imposed by equipment, cables piping, equipment and other loads associated with building. Floors shall be designed for live loads as per relevant IS. Cable and piping loads shall also be considered additionally for floors where these loads are expected.

For consideration of loads on structures, IS: 875 shall strictly adhere to. Any other load coming in the structure, not mentioned in IS 875 shall be calculated as per relevant IS code and NBC.

15.2.3 Submission

The following information shall be submitted for review and approval to the Owner:

1. Design criteria shall comprise the codes and standards used, applicable climatic data including wind loads, earthquake factors maximum and minimum temperatures applicable to the building locations, assumptions of dead and live loads, including equipment loads, impact factors, safety factors and other relevant information.

2. Structural design calculations and drawing (including construction/fabrication) for all reinforced concrete and structural steel structures.

3. Fully, dimensioned concept plan including floor plans, cross sections, longitudinal sections, elevations and perspective view of each building. These drawings shall be drawn at a scale not smaller than 1:75 and shall identify the major building components.

4. Fully dimensioned drawings showing details and sections drawn to scales of sufficient size to clearly show sizes and configuration of the building components and the relationship between them.

5. Product information of building components and materials, including walls partitions flooring ceiling, roofing, door and windows and building finishes.

6. A detailed schedule of building finishes including colour schemes.

7. A door & window schedule showing door types and locations, door lock sets and latch sets and other door hardware.

Approval of the above information shall be obtained before ordering materials or starting fabrication or construction as applicable.

15.2.4 Finish Schedule

(a) The finishing schedule is given in subsequent clauses.

(b) M.S. Ladder should be provided to access the control room roof from outside. Ladder shall be made up of ISMC 75x40 which will run as beam one meter apart and intermediate steps will be made up of 45x45x5 angle with rise of 300 mm. Red oxide premier shall be applied initially, then two coats of rich zinc paint shall be applied to avoid corrosion.

15.2.5 Flooring

Flooring in various rooms of control room building shall be as for detailed schedules given in Table -1

15.2.6 Walls

Control room buildings shall be of framed superstructure. All walls shall be non-load bearing walls. Min. thickness of external walls shall be 230 mm (one brick) with 1:6 cement sand mortar.

15.2.7 Plastering

All internal walls shall have minimum 12mm and 15 mm thick 1:6 cement sand plaster on either side of wall. The ceiling shall have 6mm thick 1:4 cement sand plaster.

15.2.8 Finishing

All external surfaces shall have 18 mm cement plaster in two coats, under layer 12 mm thick cement plaster 1:5 and finished with a top layer 6 mm thick cement plaster 1:6 (DSR 13.19) with water proofing compound. The paint shall be antifungal quality of reputed brand suitable for masonry surfaces for high rainfall zone. White cement primer shall be used as per manufacturer's recommendation.

Internal finish Schedule is given Table - 1 below:

TABLE-1

Sl.No.	Location	Flooring & Skirting 150mm high	Wall Internal	Ceiling	Doors, Windows, Ventilators
1.	Control Room, Relay Room	Precast Terrazo tiles (DSR'02, item no. 11.29A.2 & 11.31.2	Oil bound washable distemper on smooth surface applied with 2mm thick Plaster of Paris putty. (DSR'02 – 13.40 A & 13.77.2)	White Wash (DSR'02 – 13.70.1)	1) Standard steel rolled section frames with 5 mm glass. DSR'02 – 10.12, 10.13 & 10.14 2) Flush door shutters - DSR'02 – 9.25.2
2.	Sub-station Incharge, Office, corridor, staff room.	Precast Terrazo tiles (DSR'02, item no. 11.29A.2 & 11.31.2	Oil bound washable distemper on smooth surface applied with POP putty. (DSR'02 – 13.40 A & 13.77.2)	White Wash (DSR'02 – 13.70.1)	1) Standard steel rolled section frames with 5 mm glass. DSR'02 – 10.12, 10.13 & 10.14 2) Flush door shutters - DSR'02 – 9.25.2
3.	Battery room	Acid and Alkali Resistant tiles. DSR'02 – 11.36 C. 1 & 11.36 C.1.1	Dado of acid resistant tile 1.2 M high & Paint above 1.2 M to ceiling. DSR'02 – 11.36 C. 2.1, 11.36C.2 & 13.96.1	Acid resistant Paint. DSR'02 – 13.96.1	1) Standard steel rolled section frames with 5 mm glass. DSR'02 – 10.12, 10.13 & 10.14 2) Flush door shutters - DSR'02 – 9.25.2 Painted with acid resistant Paint. DSR'02 – 13.96.1
4.	Toilet	Ceramic glazed tiles in flooring DSR'02 – 11.74	DADO glazed tile 2.1M high for toilet (DSR 02 - 11.73)	White Wash (DSR'02 – 13.70.1)	1) Standard steel rolled section frames with 5 mm glass. DSR'02 – 10.12, 10.13 & 10.14 2) Flush door shutters - DSR'02 – 9.25.2
5.	Other areas not specified	Terrazo tiles (DSR'02 - 11.29A.2 & 11.31.20	Oil bound distemper, DSR'02 - 13.40A & 13.77	White Wash (DSR'02 – 13.70.1)	

Note: DSR item references (DSR-2002) to be read with CPWD specifications are only for material and workmanship guidance of the Contractors.

15.2.9 Roof

Roof of the C.R. Building shall consist of Cast-in-situ RCC slab treated with a water proofing system which shall be an integral cement based treatment conforming to CPWD specification (item no. 25.8 of DSR 2002). The water proofing treatment shall be of following operations:

(a) Applying and grouting a slurry coat of neat cement using 2.75 kg/m^2 of cement admixed with proprietary water proofing compounds conforming to IS: 2645 over the RCC slab including cleaning the surface before treatment.

(b) Laying cement concrete using broken bricks/brick bats 25mm to 100mm size with 50% of cement mortar 1:5 (1 cement: 5 coarse sand) admixed with proprietary water proofing compound conforming to IS: 2645 over 20mm thick layer of cement mortar of min 1:5 (Cement: 5 coarse sand) admixed with proprietary water proofing compound conforming to IS: 2645 to required slope and treating similarly the adjoining walls upto 300mm height including rounding of junctions of walls and slabs.

(c) After two days of proper curing applying a second coat of cement slurry admixed with proprietary water proofing compound conforming to IS: 2645.

(d) Finishing the surface with 20mm thick joint less cement mortar of mix 1:4 (1 cement: 4 course sand) admixed with proprietary water proofing compound conforming to IS: 2645 and finally finishing the surface with trowel with neat cement slurry and making of 300 x 300 mm square.

(e) The whole terrace so finished shall be flooded with water for a minimum period of two weeks for curing and for final test. All above operations to be done in order and as directed and specified by the Engineer-in-charge.

With average thickness of 120 mm and minimum thickness at khurra at 65 mm.

15.2.10 Glazing

Minimum thickness of glazing shall be 5.0 mm. as per IS: 2835.

15.2.11 Doors and Windows

The details of doors and windows of the control room building shall be as per finish schedule Table-1 and tender drawing with the relevant IS code. Rolling steel shutters and rolling steel grills shall be provided as per layout and requirement of buildings. Paints used in the work shall be of best quality specified in CPWD specification.

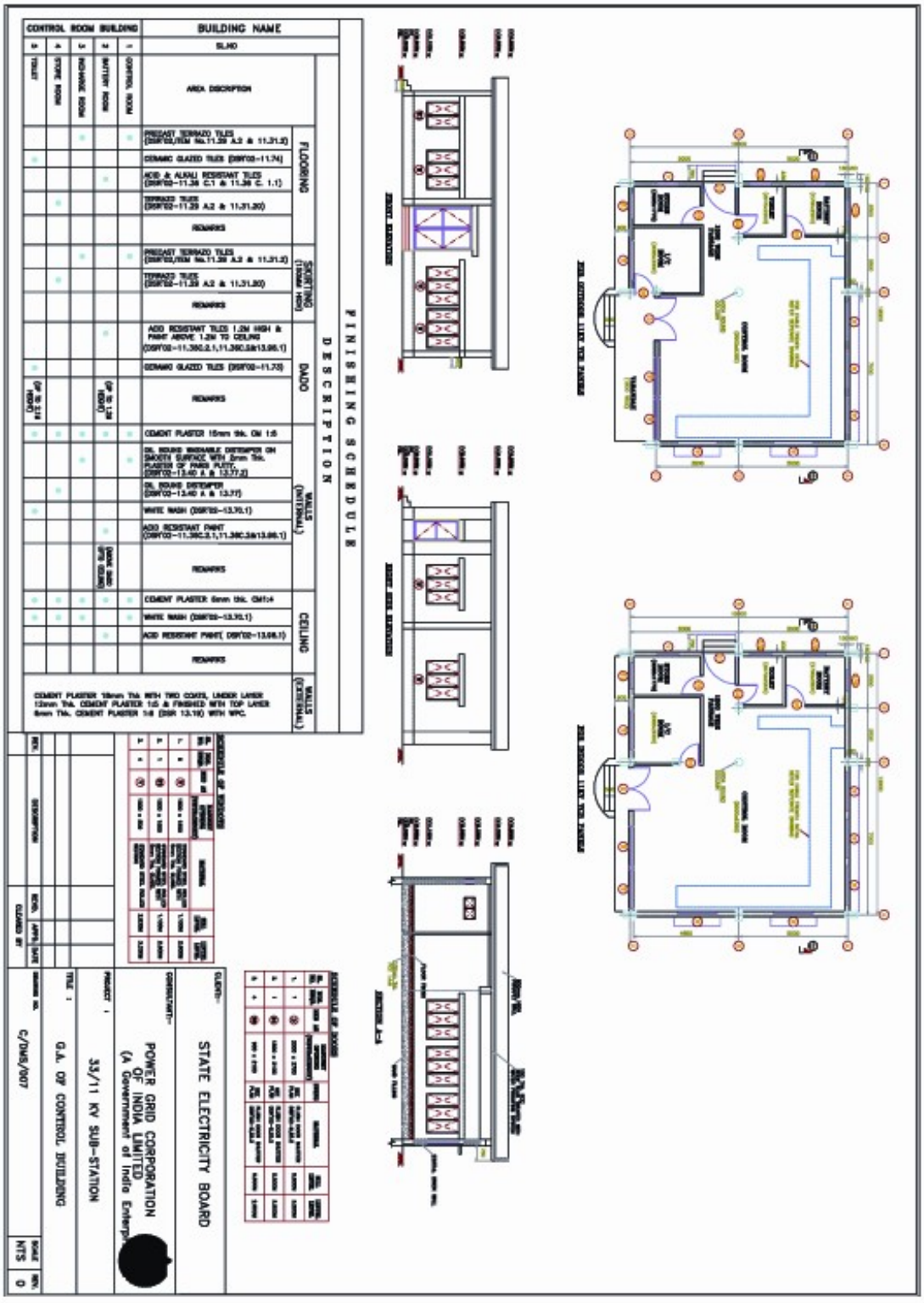
FINISHING SCHEDULE
DESCRIPTION
BUILDING NAME
CONTROL ROOM BUILDING
STATE ELECTRICITY BOARD
POWER GRID CORPORATION OF INDIA LIMITED
33/11 KV SUB-STATION
G.A. OF CONTROL BUILDING
C/DMS/007

15.2.12 Plumbing & Sanitation

(i) All plumbing and sanitation shall be executed to comply with the requirements of the appropriate byelaws, rules and regulations of the Local Authority having jurisdiction over such matters. The Contractor shall arrange for all necessary formalities to be met in regard to inspection, testing, obtaining approval and giving notices etc.

(ii) PVC syntax or equivalent make Roof water tank of adequate capacity depending on the number of users for 24 hours storage shall be provided. Minimum 1 Nos. 500 liters capacity shall be provided.

(iii) Galvanized MS pipe of medium class conforming to IS: 1239 shall be used for internal & external piping work for potable water supply.

(iv) Sand CI pipes with lead joints conforming to IS: 1729 shall be used for sanitary works above ground level.

(v) Each toilet shall have the following minimum fittings.

(a) WC (Western type) 390 mm high with toilet paper roll holder and all fittings

Or

WC (Indian Type) Orissa Pattern (580 x 440 mm) with all fittings (both types of WCs shall be provided at alternate locations).

(b) Urinal (430 x 260 x 350 mm size) with all fittings.

(c) Wash basin (550 x 400 mm) with all fittings.

(d) Bathroom mirror (600 x 450 x 6 mm thick) hard board backing

(e) CP brass towel rail (600 x 20 mm) with C.P. brass brackets

(f) Soap holder and liquid soap dispenser.

(vi) All fittings, fastener, grating shall be chromium plated.

(vii) All sanitary fixtures and fittings shall be of approved quality and type manufactured by well known manufacturers. All items brought to site must bear identification marks of the type of the Manufacturer.

(viii) Soil, waste and drain pipes, for underground works shall be stoneware for areas not subject to traffic load. Heavy-duty cast iron pipes shall be used otherwise.

(ix) **In case of Augmentation & R&M of existing substation, amount of work shall be envisaged by contract for lump sum quotation**.

16.0 MISCELLANEOUS GENERAL REQUIREMENTS

16.1 Dense concrete with controlled water cement ratio as per IS-code shall be used for all underground concrete structures such as pump-house, tanks, water retaining structures, cable and pipe trenches etc. for achieving water-tightness.

16.2 All joints including construction and expansion joints for the water retaining structures shall be made water tight by using PVC ribbed water stops with central bulb. However, kicker type (externally placed) PVC water stops shall be used for the base slab and in other areas where it is required to facilitate concreting. The minimum thickness of PVC water stops shall be 5 mm and minimum width shall be 230 mm.

16.3 All steel sections and fabricated structures that are required to be transported on sea shall be provided with anti corrosive paint to take care of sea worthiness.

16.4 All mild steel parts used in the water retaining structures shall be hot-double dip galvanised. The minimum coating of the zinc shall be 750 gm/sq. m. for galvanised structures and shall comply with IS: 2629 and IS: 2633. Galvanizing shall be checked and tested in accordance with IS: 2633.The galvanizing shall be followed by the application of an etching primer and dipping in black bitumen in accordance with BS: 3416.

16.5 A screed concrete layer not less than 100 mm thick and of grade not weaker than M10 conforming to IS: 456-1978 shall be provided below all water retaining structures. A sliding layer of bitumen paper or craft paper shall be provided over the screed layer to destroy the bond between the screed and the base slab concrete of the water retaining structures.

16.6 Bricks having minimum 75kg/cm2 compressive strength can only be used for masonry work. Contractor shall ascertain himself at site regarding the availability of bricks of minimum 75kg/cm2 compressive strength before submitting his offer.

16.7 Doors and windows on external walls of the buildings (other than areas provided, with insulated metal claddings) shall be provided with RCC sunshade over the openings with 300 mm projection on either side of the openings. Projection of sunshade from the wall shall be minimum 450 mm over window openings and 750 mm over door openings.

16.8 Service ladder shall be provided for access to all roofs.

16.9 Angles 45x45x5 mm (minimum) with lugs shall be provided for edge protection all round cut outs/openings in floor slab, edges of drains supporting grating covers, edges of RCC cable/pipe trenches supporting covers, edges of manholes supporting covers, supporting edges of manhole precast cover and any other place where breakage of corners of concrete is expected.

16.10 Anti termite chemical treatment shall be given to column pits, wall trenches, foundations of buildings, filling below the floors etc. as per IS: 6313 and other relevant Indian Standards.

16.11 All rungs for ladder shall also be galvanised as per IS: 277 medium classes.

16.12 For all civil works covered under this specification, nominal mix by volume batching as per CPWD specification is intended. The relationship of grade of concrete and ratio of ingredients shall be as below:

Sl.No.	Mix	Cement	Sand	Coarse aggregate of 20 mm down grade as per IS 383
1.	M 10	1	3	6
2.	M 15	1	2	4
3.	M 20	1	1.5	3

The material specification, workmanship and acceptance criteria shall be as per relevant clauses of CPWD specification and approved standard Field Quality Plan.

16.13 The details given in tender drawings shall be considered along with details available in this section of the specification while deciding various components of the building.

16.14 Items/components of buildings not explicitly covered in the specification but required for completion of the project shall be deemed to be included in the scope.

17.0 INTERFACING

The proper coordination & execution of all interfacing civil works activities like fixing of conduits in roofs/walls/floors, fixing of foundation bolts, fixing of lighting fixtures, fixing of supports/embedment, provision of cutouts etc. shall be the sole responsibility of the Contractor. He shall plan all such activities in advance and execute in such a manner that interfacing activities do not become bottlenecks and dismantling, breakage etc. is reduced to minimum.

18.0 WATER SUPPLY

(i) Contractor shall make its own arrangement for construction water.

(ii) The contractor shall carry out all the plumbing/erection works required for supply of water in control room building.

(iii) The details of tanks, pipes, fittings, fixtures etc for water supply are given elsewhere in the specification under respective sections.

(iv) A scheme shall be prepared by the contractor indicating the layout and details of water supply which shall be got approved by the Owner before actual start of work including all other incidental items not shown or specified but as may be required for complete performance of the works.

(v) Bore wells and pumps for water supply are in the scope of contractor meeting the day-to-day requirement of the water supply.

(vi) If the water is supplied by Municipal Corporation then bore well for water supply purposes is not required to be carried out by contractor. Contractor shall also make necessary arrangement /formalities to receive water connection from corporation.

19.0 SEWERAGE SYSTEM

(i) Sewerage system shall be provided for control room building.

(ii) The Contractor shall construct septic tank and soak pit suitable for 5 users if outside of Municipal Corporation zone. Otherwise, all necessary arrangement for the disposal of sewerage to the Municipal Corporation's end shall be arranged by the contractor at his own cost for regularizing the disposal activity.

(iii) The septic tank and soak pit shall be constructed as per enclosed Drawing no. C/DMD/006-Rev-0.

20. FIRE PROTECTION WALLS

20.1 General

Fire protection walls shall be provided by contractor wherever applicable and its Technical details are given below.

20.2 Application criteria

A firewall shall be erected between the transformers to protect each one from the effects of fire on another as per applicable Rules/Standards.

In case, the station transformer is kept inside the building and distance between this station transformer and Power Transformer is less than 10m, a fire wall shall be erected between the building and the equipment or otherwise the building walls shall be fire resistance.

20.3 Fire resistance

The firewall shall have a minimum fire resistance of 4 hours. The partitions, which are made to reduce the noise level, shall have the same fire resistance where

the partitions are also used as firewalls. The walls of the building, which are used as firewalls, shall also have a minimum fire resistance of 4 hours.

The firewall shall be designed in order to protect against the effect of radiant heat and flying debris from an adjacent fire.

20.4 Mechanical resistance

The firewall shall have the mechanical resistance to withstand local atmospheric conditions. If this wall shall serve as a support for equipment such as insulators etc., its mechanical rigidity must be increased. Connecting the walls by steel or other structures, which may produce a reversing torque, if overheated, shall be avoided.

20.5 Dimensions

The firewall shall extend at least 2 m on each side of the transformer and at least 1 m above the conservator tank or safety vent.

A minimum of 2-meter clearance shall be provided between the equipments e.g. transformer and firewalls.

The building walls, which act as firewalls, shall extend at least 1 m above the roof in order to protect it.

20.6 Materials

The firewall may be made of reinforced concrete (M-20 grade), as per the system requirements.

21. STATUTORY RULES

21.1 Contractor shall comply with all the applicable statutory rules pertaining to factories act (as applicable for the State). Fire Safety Rules of Tariff Advisory Committee, Water Act for pollution control etc.

21.2 Provisions for fire proof doors, no. of staircases, fire separation wall, plastering on structural members (in fire prone areas) etc. shall be made according to the recommendations of Tariff Advisory Committee.

21.3 Statutory clearance and norms of State Pollution Control Board shall be followed as per Water Act for effluent quality from plant.

21.4 Requirement of sulphate resistant cement (SRC) for sub structural works shall be decided in accordance with the Indian Standards based on the findings of the detailed soil investigation to be carried out by the Bidder.

21.5 Foundation system adopted by Bidder shall ensure that relative settlement and other criteria shall be as per provision in IS: 1904 and other Indian Standards

21.6 All water retaining structures designed as un-cracked section shall also be tested for water tightness at full water level in accordance with clause no. 10 of IS: 3370 (Part-I).

21.7 Construction joints shall be as per IS: 456.

21.8 All underground concrete structures like water retaining structures etc. shall have plasticizer cum water proofing cement additive conforming to IS: 9103. In addition, limit on permeability as given in IS: 2645 shall also be met with. The concrete surface of these structures in contact with earth shall also be provided with two coat of bituminous painting for water/damp proofing. In case of water leakage in the above structures, Injection Method shall be applied for repairing the leakage.

21.9 All building/construction materials shall conform to the best quality specified in CPWD specifications if not otherwise mentioned in this specification.

21.10 All tests as required in the standard field quality plans have to be carried out.

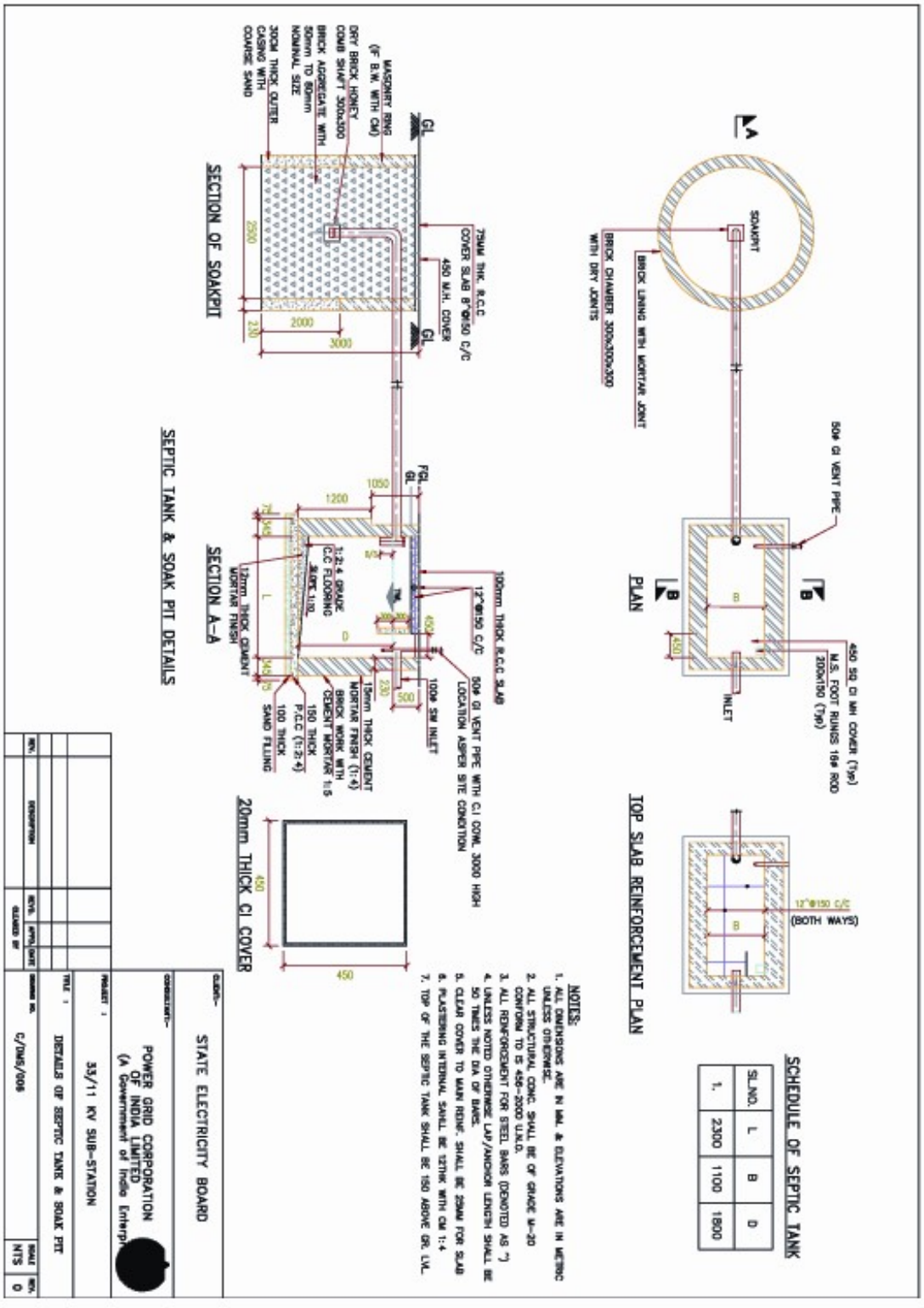
SECTION OF SOAKPIT
SEPTIC TANK & SOAK PIT DETAILS
SECTION A-A
20mm THICK CI COVER
PLAN
TOP SLAB REINFORCEMENT PLAN
SCHEDULE OF SEPTIC TANK
SL.NO. L B D
1. 2300 1100 1800
NOTES:
STATE ELECTRICITY BOARD
POWER GRID CORPORATION OF INDIA LIMITED
33/11 KV SUB-STATION
DETAILS OF SEPTIC TANK & SOAK PIT
C/DMS/006
NTS

22.0 FENCING

22.1 Product materials for fencing

The minimum requirements are as follows:

22.1.1 Chain Link fence fabric in accordance to IS-2721

1.	Size of mesh	:	75 mm
2.	Nominal wire size	:	3.15 mm dia
3.	Width of chain link	:	2000 mm
4.	Class of zinc coating	:	medium
5.	Zinc coated after weaving.		

22.1.2 Posts

	Angle Section
Intermediate	: L 50 x 50 x 6
Straining posts	: L 65 x 65 x 6
Stay post	: L 50 x 50 x 6

1. All structural steel shall conform to IS: 2062 and shall be painted with a coat of approved steel primer and two coats of synthetic enamel paint.

2. The Chain Link fabric shall be fixed to the post at the top and bottom of the fence by welding/fixing 50 mm MS flat all through its length.

3. Fencing top shall be either of galvanised barbed wire or tape. Barbed wire shall conform to IS: 278.

4. The barbed wire may consist of not more than two splices per reel. The barbed wire shall be formed by twisting two line wires, one containing the barbs. The barbed wire shall be designated as A-4 IS: 278 and shall be galvanized.

5. Above chain link, 3-rows (6 nos) of barbed tape/wire shall be provided in each arm of the Y shaped barbed arm at top.

6. With barbed tape/wire above the chain link fence, the total fence height shall be minimum 2500 mm above finished gravel level.

7. Barbed tape/wire arms shall be same as intermediate and straining post.

8. Tension wire: single strand, high tensile, galvanised steel wire, 4 mm diameter.

9. Fittings and hardware: cast aluminum alloy or galvanized steel, malleable or ductile cast iron turnbuckles to be drop forged.

10. For every 50 reels or part there of samples of the barbed wire/tape and the individual line wires shall be put to tensile test and in case of failure to conform to the tensile properties given below, two additional tests of each kind shall be made on the samples cut from other reels.

11. GI chain link mesh shall be as per IS: 2721. Mesh size 75 mm and nominal wire size shall be 3.15 mm diameter.

Tensile properties

Tensile strength of line wire	:	40 to 60Kgs/Sq.mm
Minimum Breaking load of Complete barbed wire/tape	:	375Kgs.

On the results of these additional tests, the whole or portion of the barbed wire/tape shall be accepted or discarded by the Purchaser, as the case may be.

22.2 INSTALLATION

1. Contractor shall submit the fencing drawing Fence shall be installed along lines shown on approved drawings.

2. Post holes shall be excavated by approved methods.

3. Intermediate posts shall be spaced 2.5 m apart measured parallel to ground surface.

4. Straining posts shall be installed at equal intervals not exceeding 25.0 m.

5. Straining posts shall be installed at sharp changes in grade, at corners, at change of direction and where directed.

6. All corner post will have two-stay post and every tenth post will have a transverse stay post.

7. Posts shall be set in 1:2:4 plain cement concrete Blocks of minimum dimension 400 mm x 400 mm x 1000 mm deep Concrete work shall conform to relevant clause. Post shall be braced and held in plumb position and true alignment and elevation until concrete has set.

8. Fence fabric shall not be installed until concrete has cured a minimum of 7 days.

9. Bottom and top of the fence fabric shall be fixed with MS flats of 50 mm x 6mm (min).

10. Fence fabric shall be laid out with barbed edge on top, stretched tightly and shall be fastened to intermediate, post gate and straining post with 50 x 6 flats.

11. Fabric shall be secured to tension wires with tie wires at 400 mm intervals. Tie wires shall be given not less than two twists.

12. Barbed tape shall be spliced with standard wire splices.

13. Barbed tape shall be stretched to have uniform tension.

14. Barbed tape shall be attached to barbed wire arms with approved metal clips.

15. Toe wall of one Brick/Random Rubble masonry, with notches over 75 mm thick PCC (1:4:8) shall be provided below all fencing and shall be minimum 200 mm above and 200 mm below finished ground level. All exposed surfaces of brick toe wall shall be provided with 1:6 cement sand plaster and coated with two coats of colour wash with a base coat of white wash with lime. Rubble masonry toe wall shall be with raised & cut pointing and 50 mm PCC (1:2:4) band coping.

16. Proper earthing shall be done for fencing also.

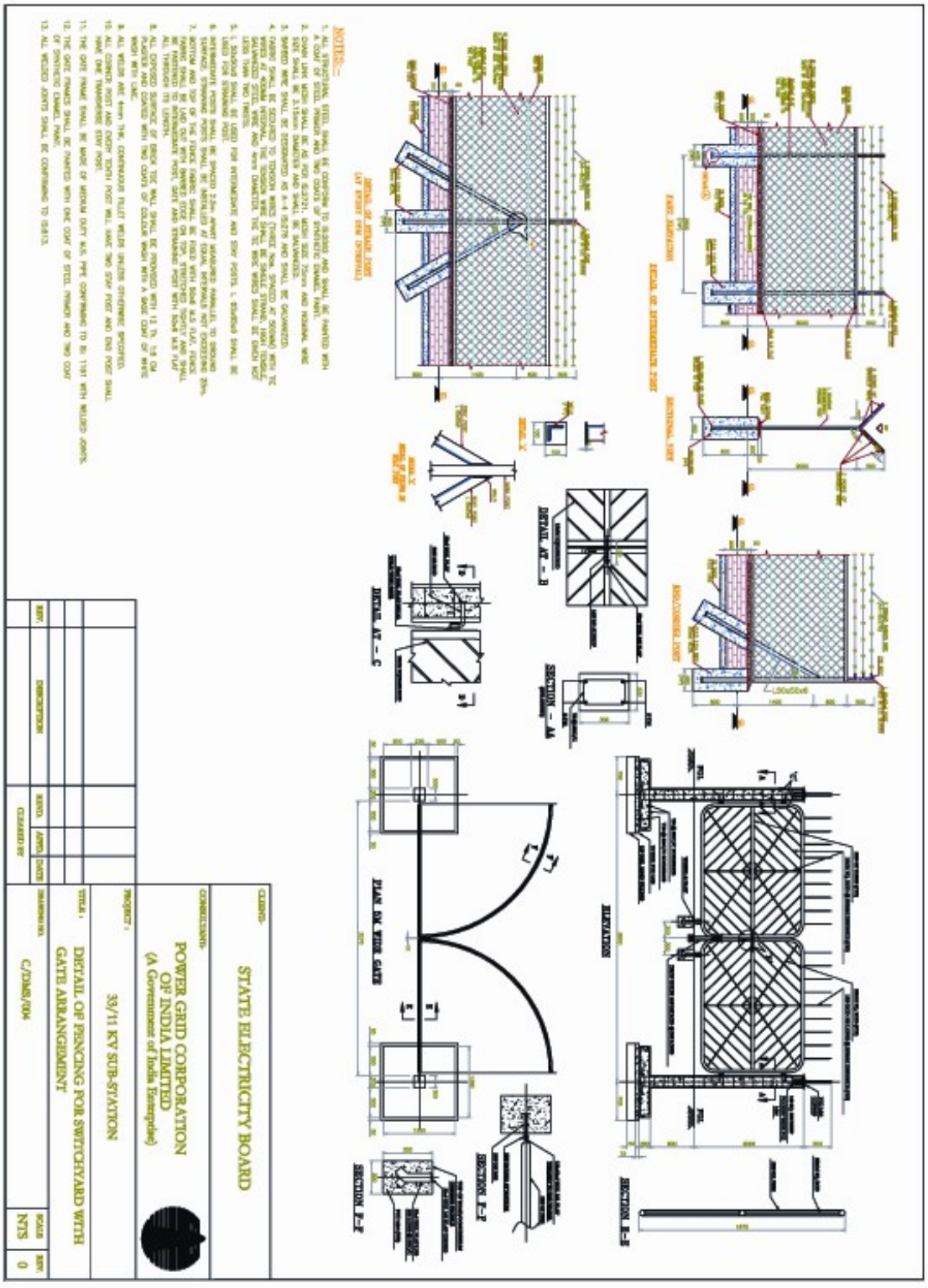
NOTES:-
STATE ELECTRICITY BOARD
POWER GRID CORPORATION OF INDIA LIMITED
(A Government of India Enterprise)
33/11 KV SUB-STATION
DETAIL OF FENCING FOR SWITCHYARD WITH GATE ARRANGEMENT
C/DMS/004
NTS
0

NEW ITEMS FOR DIFFERENTIAL COSTING OF CIVIL ITEMS OF TILES, DOORS, WINDOWS TO BE INSTALLED IN CONTROL ROOM BUILDING IN LIEU OF OLD ITEMS AS PER TS SECTION-II (ITEM REF : INSTALLATION PORTION BOQ)

In-lieu of Precast Terrazzo tiles, Standard Steel rolled section frames & Flush door shutters (as per Table -1, clause 15.2.8 above), FOLLOWING ITEMS ARE TO BE PROVIDED IN CONTROL ROOM BUILDING

Vitrified tiles – DSR Item no. 11.41.2 & 11.46.2 (DSR 2018)

Aluminium Doors & Windows –DSR Item no. 21.1.1.2 & 21.1.2.2 (DSR 2018).

GLAZING (Float Glass) – Minimum 5 mm thick for Aluminium Windows & 6mm thick for Aluminium Doors

The DSR Reference (DSR 2018) is to be read in conjunction with CPWD 2019 Specifications.

Typical Single Line Diagram of New 33/11 kV PSS with one no. 33/11 kV Power tramsformer

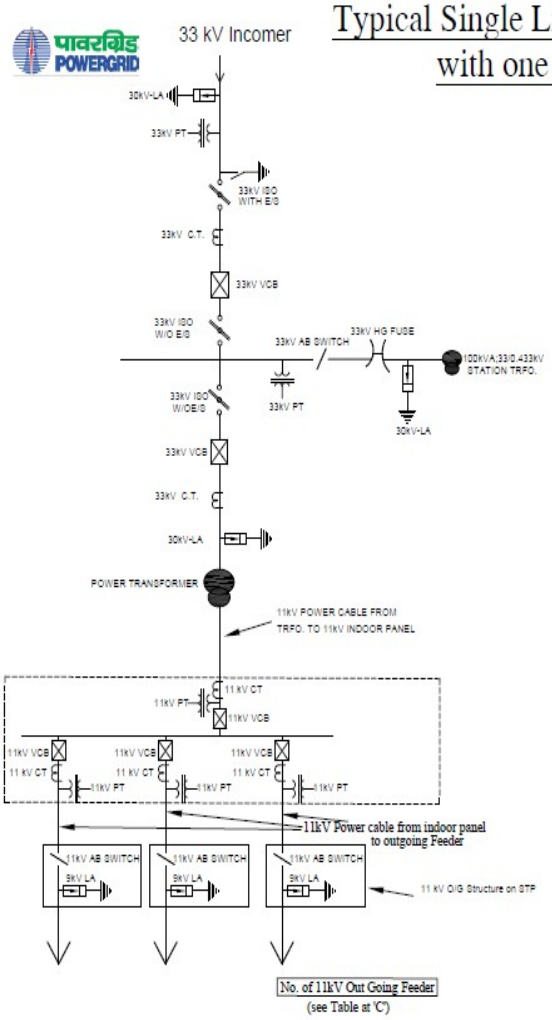

A. Quantity for 33kV feeder (Incomer) & 33kV Bus

1. 30 kV LA - 1 set (3 nos.)
2. 33 kV VCB - 1 set
3. 33 kV CT - 1 set
4. 33 kV ISO/DBCR With E/S– 1 set
5. 33 kV ISO/DBCR W/O E/S– 1 set
6. 33 kV PT -2 set (6 nos.)

B. Quantity for 33/11kV Transformer Bay

1. 33 kV VCB - 1 set
2. 33 kV CT - 1 set
3. 33 kV ISO/DBCR W/O E/S – 1 set
4. 30 kV LA - 1 set

C. Quantity for 11kV trf & feeders (Indoor Panels)-sets

Type of Indoor Panel	Transformer Capacity(MVA)				
	2.5	3.15	5	7.5	10
1. 11kV trf Module (incl.PT CT & CB)	1	1	1	1	1
2. 11kV O/G feeder Module (incl. CT & CB)	1	2	2	3	3

D. Quantity for 33/0.4kV Station Transformer Bay

1. 33kV HG fuse - 1 set
2. 33kV AB Switch – 1 set
3. 30 kV, LA- 1 set (3 nos.)

Powergrid Corporation of India Limited
Single Line Diagram
For Bidding Purpose Only

Typical Single Line Diagram of New 33/11 kV PSS with two nos. 33/11 kV Power tramsformers

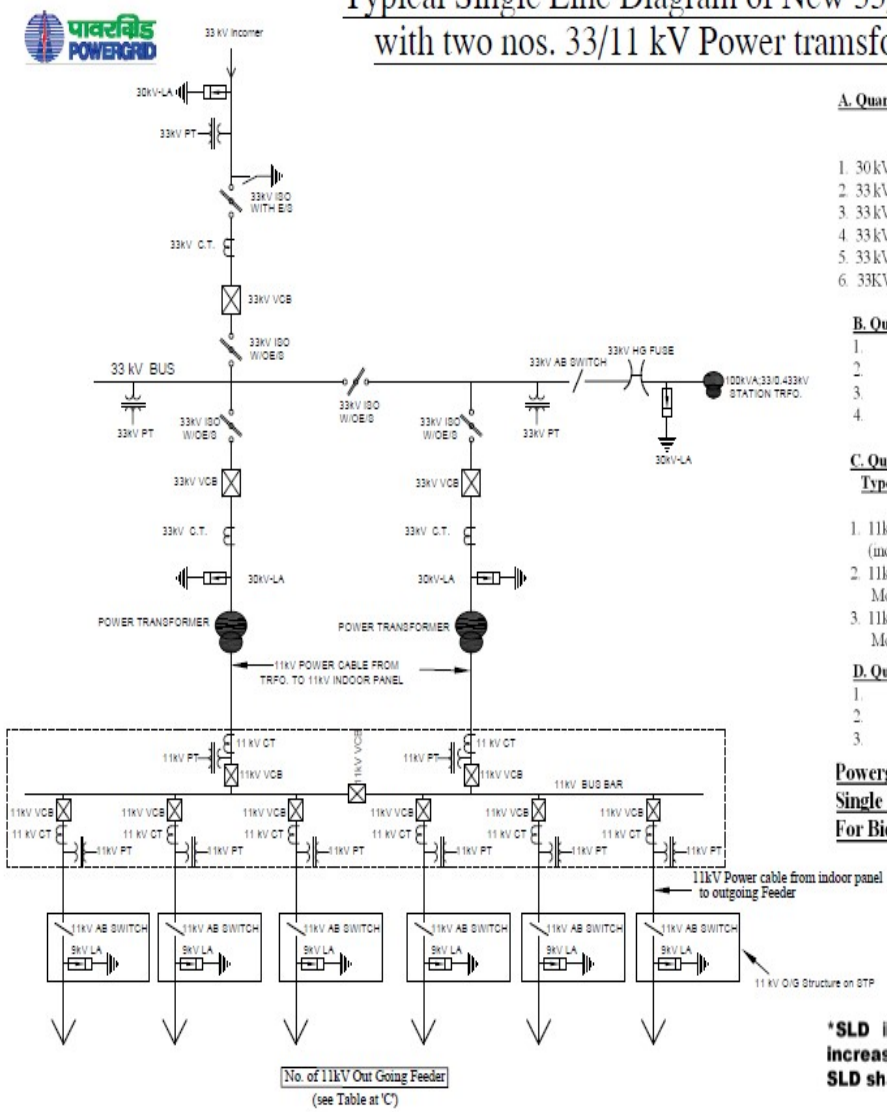

A. Quantity for 33kV feeder (Incomer/Outgoing) & 33kV Bus

	Qty in set(no.)			
	1Bay	2Bay	3Bay	4Bay
1. 30 kV LA	1(3)	2(6)	3(9)	4(12)
2. 33 kV VCB	1	2	3	4
3. 33 kV CT	1	2	3	4
4. 33 kV ISO/DBCR With E/S	1	2	3	4
5. 33 kV ISO/DBCR W/O E/S	2	3	5	7
6. 33KV PT, 1Phase	3(6)	4(12)	5(15)	6(18)

B. Quantity for 33/11kV Transformer Bays(2 nos.)

1. 33 kV CB - 2 set
2. 33 kV CT - 2 set(6nos)
3. 33 kV DBCR – 2set
4. 30 kV LA - 2 set(6 nos)

C. Quantity for 11kV trf & feeders (Indoor Panels)-sets

Type of Indoor Panel	Transformer Capacity(MVA)				
	2.5	3.15	5	7.5	10
1. 11kV trf Module (incl.PT CT & CB)	2	2	2	2	2
2. 11kV O/G feeder Module (incl. CT & CB)	2	4	4	6	6
3. 11kV Bus coupler Module	1	1	1	1	1

D. Quantity per 33/0.4kV Station Transformer Bay

1. 33kV HG fuse - 1 set
2. 36kV AB Switch – 1 set
3. 30kV LA-3nos

Powergrid Corporation of India Limited
Single Line Diagram
For Bidding Purpose Only

***SLD is indicating only one line bay. With increase in no. of line bay, line bay portion of SLD shall be replicated accordingly.**